Assembly Instructions

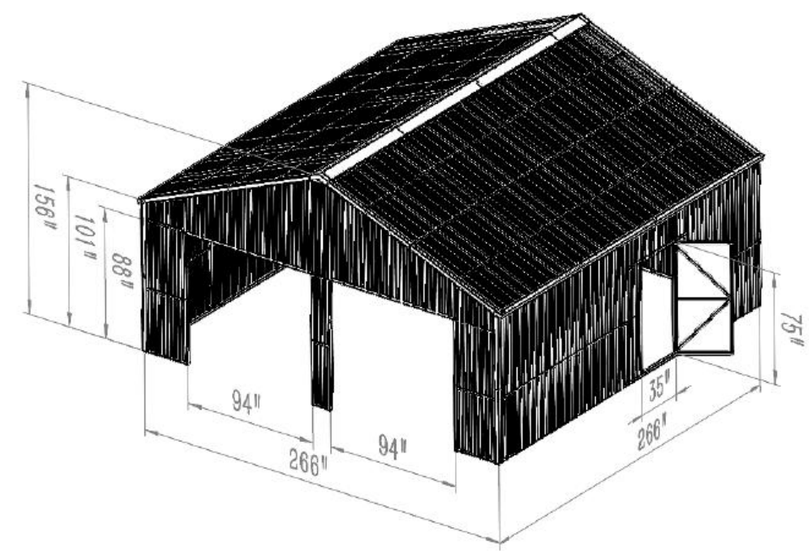

Model:2223G-V3.1

CAUTION: SOME PARTS HAVE SHARP EDGES. CARE MUST BE TAKEN WHEN HANDLING THE VARIOUS PIECES TO AVOID A MISHAP. FOR SAFETY SAKE, PLEASE READ SAFETY INFORMATION PROVIDED IN THIS MANUAL BEFORE BEGINNING CONSTRUCTION. WEAR GLOVES WHEN HANDLING METAL PARTS.

BEFORE YOU START:

·Before beginning construction, check local building codes regarding footings, location and other requirements. Study and understand this owner's manual. Important information and helpful tips

will make your construction easier and more enjoyable.

· Instructions are supplied in this manual and contain all appropriate information for your build-ing model. Review all instructions before you begin, and during assembly, follow the step sequence carefully for successful results.

Identify all parts and check quantities against parts list.

· Be sure the day you select to install your building is dry and calm. Do not attempt to assemble your building on a windy day. Be careful on wet or muddy ground.

· Whenever possible, two or more people should work together to assemble your building. One person can position parts or panels while the other is able to handle the fasteners and the tools.

SAFETY FIRST!

Safety precautions are important to follow throughout the construction of your building

· Care must betaken when handling various pieces of your building since some contain sharp edges. Please wear work gloves, eye protection and long sleeves when assembling or performing any maintenance on your building.

· Never concentrate your total weight on the roof of the building. When using a step ladder make sure that it is fully open and on even ground before climbing on it.

· Practice caution with the tools being used in the assembly of this building. Be familiar with the operation of all power tools.

· Do not attempt to assemble the building if parts are missing because any building left partially assembled may be seriously damaged by light winds.

· Do not attempt to assemble the building on a windy day, because the large panels acting as a "sail" can be whipped about by the wind; making construction difficult and unsafe.

WARRANTY REQUIREMENTS:

· Wash all surfaces annually using a hose and soft nylon brush.

· Within 2 km of coast -wash every 3 months as above. After a storm, wash the cladding and the gutters as soon as possible to remove any highly corrosive salt deposits.

· Volcanic Ash Fallout -wash as soon as possible, removing fall out from roof and gutters.

· Do not allow manures, chemicals or other corrosive materials to have direct contact with clad-ding.

PARTS LIST

Item no.	Reference Image	Qty.
A1	2.0*2.0*36.8″	1
A2	2.0*2.0*78.7″	1
A3	2.0*2.0*78.7″	1
A4	2.0*2.0*78.7″	1
A5	2.0*2.0*37.2″	1
A5-1	2.0*2.0*37.2″	1
A6	2.0*2.0*78.7″	2
A7	2.0*2.0*78.7″	2
A8	2.0*2.0*78.7″	1
A8-1	2.0*2.0*78.7″	1
A9	2.0*2.0*30.5″	2
A10	2.0*2.0*13.2″	1
A11	2.0*2.0*58.9″	16
A12	2.0*2.0*13.2″	2
A13	2.0*2.0*55.1″	2

Item no.	Reference Image	Qty.
A14	2.0*2.0*78.7″	1
A15	2.0*2.0*78.7″	1
A16	2.0*2.0*50.4″	1
A17	2.0*2.0*78.7″	10
A18	2.0*2.0*78.7″	10
A19	2.0*2.0*75.6″	5
A20	2.0*2.0*33.2″	2
A21	2.0*2.0*50.4″	2
A22	2.0*2.0*62.6″	1
A23	2.0*2.0*18.1″	6
A24	2.0*2.0*30.3″	3
A25	2.0*2.0*81.7″	3
A26	2.0*2.0*81.5″	3
A27	2.0*2.0*75.8″	1
A28	2.0*2.0*66.3″	2

PARTS LIST

Item no.	Reference Image	Qty.
A29	2.0*2.0*78.7″	1
A30	2.0*2.0*63.1″	1
A31	2.0*2.0*75.2″	2
B1	0.8*1.6*28.7″	4
B2	0.8*1.6*9.3″	1
B3	0.8*1.6*56.1″	4
B4	0.8*1.6*72.0″	4
B5	67.0″	32
B7	0.8*1.6*63.1″	15
B8	0.8*1.6*13.0″	1
B9	0.8*1.6*11.1″	1
B10	1.0*1.0*73.2″	2
B11	1.0*1.0*34.6″	2
B12	1.0*1.0*46.3″	2
B13	1.0*1.0*32.7″	1

Item no.	Reference Image	Qty.
P1	43.3″	23
P1-1	43.3″	2
P1-2	43.3″	1
P1-3	43.3″	5
P2	60.4″	16
P2-1	60.4″	1
P2-2	24.2″	2
P2-3	60.4″	1
P3	57.5″	7
P3-1	57.5″	2
P4	8.1″	1
P4-1	8.1″	1
P5	22.6″	1
P5-1	22.6″	1
P6	37.1″	1

PARTS LIST

Item no.	Reference Image	Qty.
P6-1	37.1″	1
P7	51.5″	1
P7-1	51.5″	1
P8	58.3″	1
P9	17.1″	1
P9-1	17.1″	1
P10	31.5″	1
P10-1	31.5″	1
P11	46.0″	1
P11-1	46.0″	1
P12	60.4″	1
P12-1	60.4″	1
P13	67.4″	1
P14	74.8″	28
P14-1	74.8″	4

Item no.	Reference Image	Qty.
P15	34.5*74.8″	2
Z1	84.6″	14
Z1-1	24.6″	2
Z1-2	51.2″	8
Z2	80.7″	6
Z2-1	25.6″	2
Z3	84.6″	3
Z3-1	31.5″	1
Z4		2
Z5	47.2″	12
Z5-1	75.1″	2
Z5-2	35.0″	1
Z6	32.3″	2
Z6-1	75.0″	2
L1		50

PARTS LIST

Item no.	Reference Image	Qty.
L2		6
L3		65
L4		9
L6		2
L7		1
L8		2
L9		1
S1	M4.2*0.8″	532
S1-1	M5.5*0.8″	1008
S2	M8*2.6″	221
S3	M4*0.3″	20
S4	M10*150″	17
S5	waterproof tape	2

FRAME

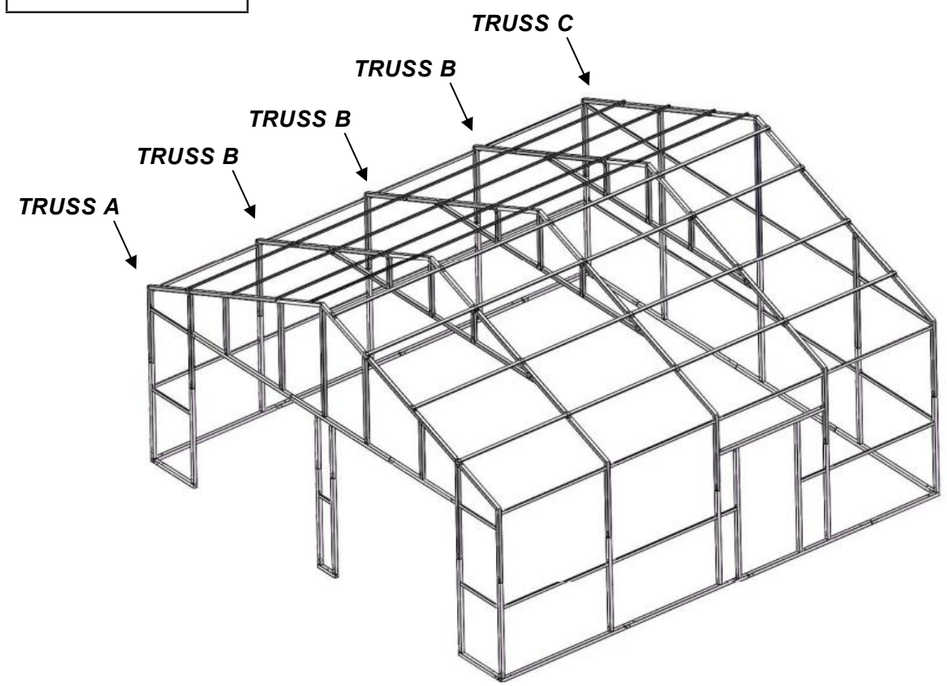

Installation foundation dimensions for reference.
Suggested dimensions for concrete foundation: Increase the length and width by 5 inches or 10 inches based on the benchmark shown in the diagram.
Suggest a thickness of at least 7 inches.

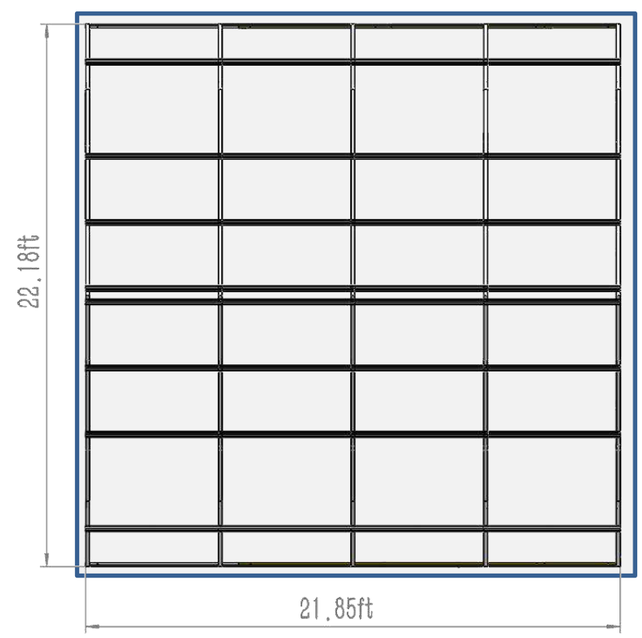

Tip

General connection method for square tubes.

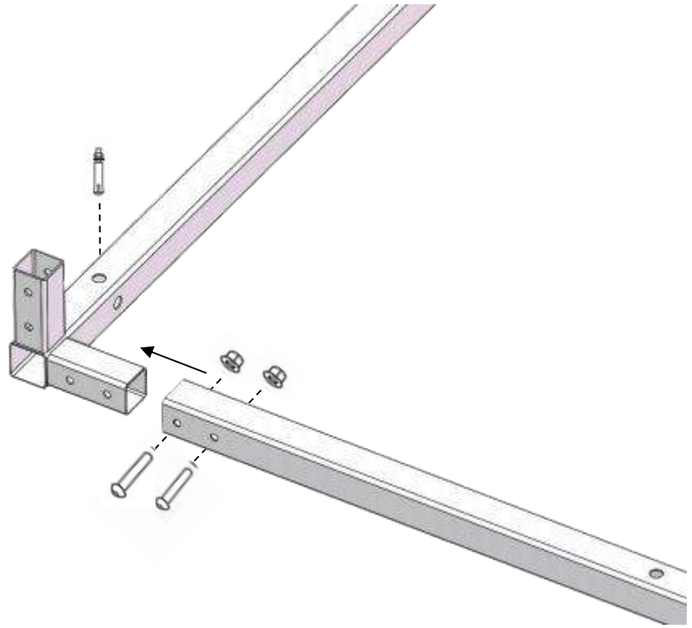

If you encounter difficulty inserting the connecting tube,please use a file to remove the burrs on the head of the square tube

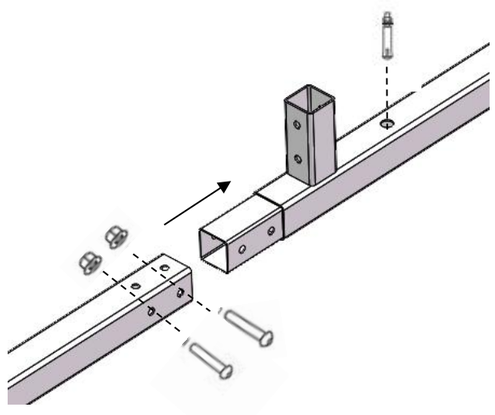

Step 1

Item no.	Reference Image	Qty.	Item no.	Reference Image	Qty.
A1		1	A2		1
A3		1	A4		1
A5		1	A5-1		1
A6		2	A7		2
A8		1	A8-1		1
A9		2	A10		1
S2		26	S4		17

1. Refer to the foundation structure Figure,draw lines on the ground for positioning,
2. Fixed on the ground with (S4)expansion bolts.
3. Check the dimensions to ensure that the installation direction and position of each component are correct.

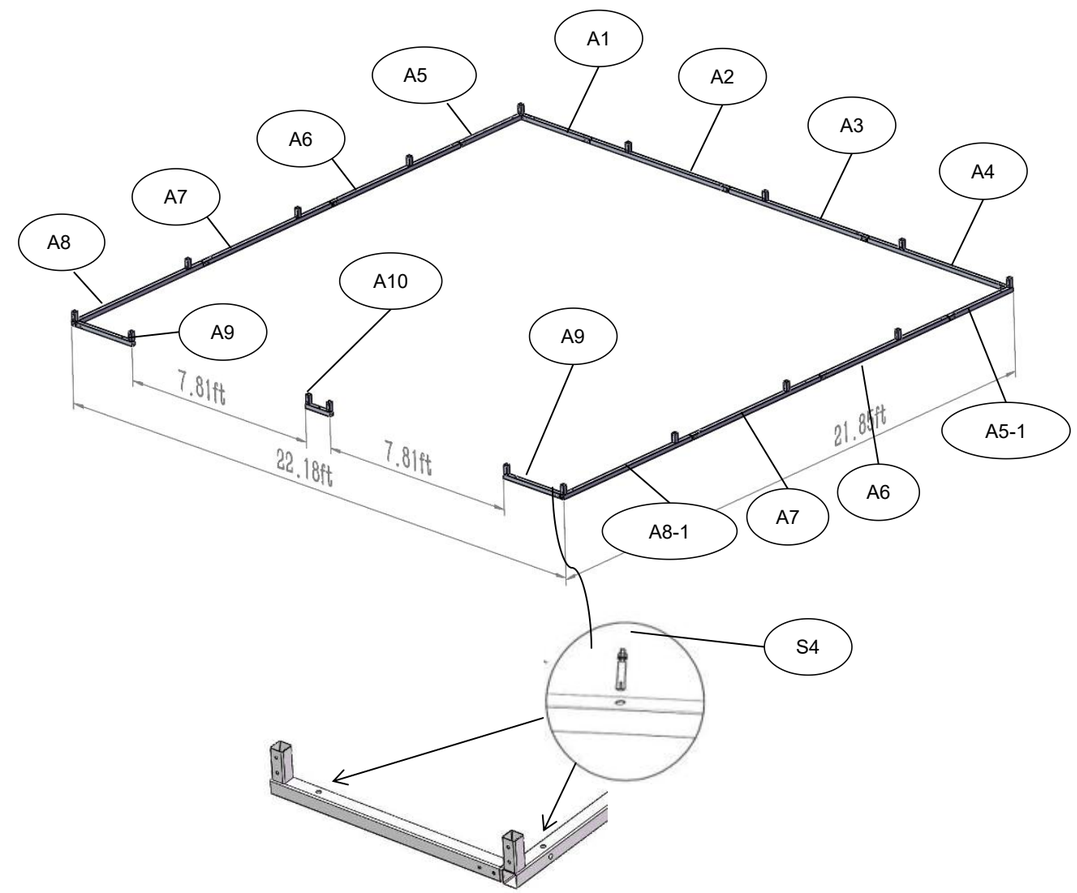

Step 2

Item no.	Reference Image	Qty.	Item no.	Reference Image	Qty.
A11		6	A12		2
A13		2	A14		1
A15		1	A16		1
A17		2	A18		2
A19		1	A20		2
A21		2	A22		1
L1		6	L4		1
S1		8	S2		52

Installation of the side posts of the gate

TRUSS A×1

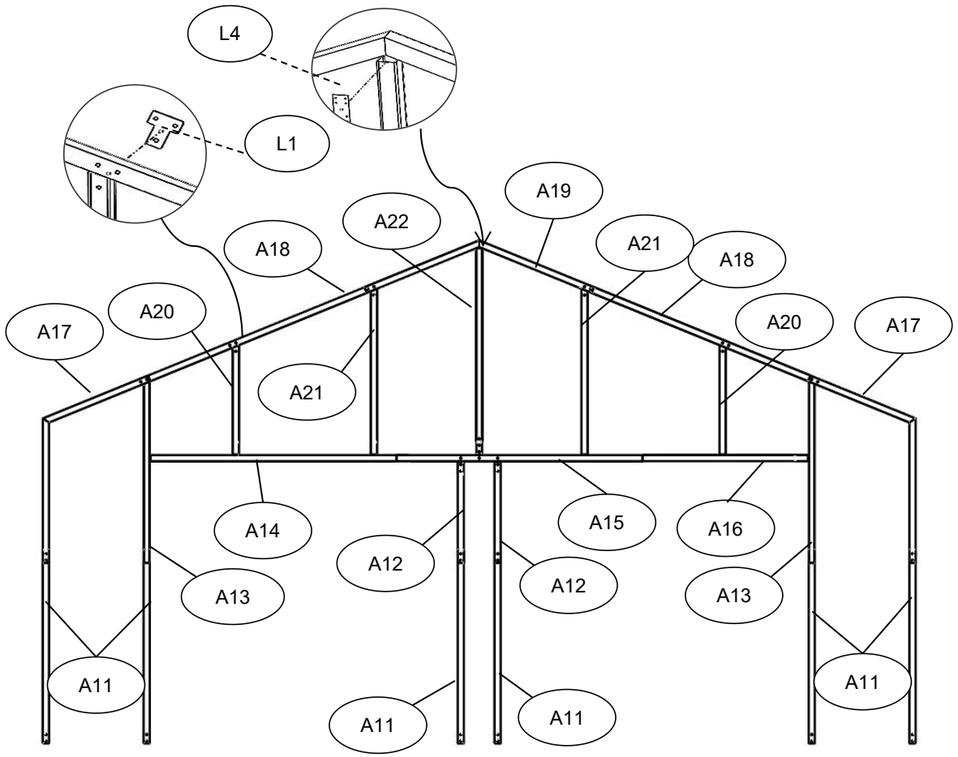

Step 3

Item no.	Reference Image	Qty.	Item no.	Reference Image	Qty.
B1		4	B2		1
L3		10	S1		40

Installation of the side crossbars of the gate
Note: The crossbar is level with the outer edge.

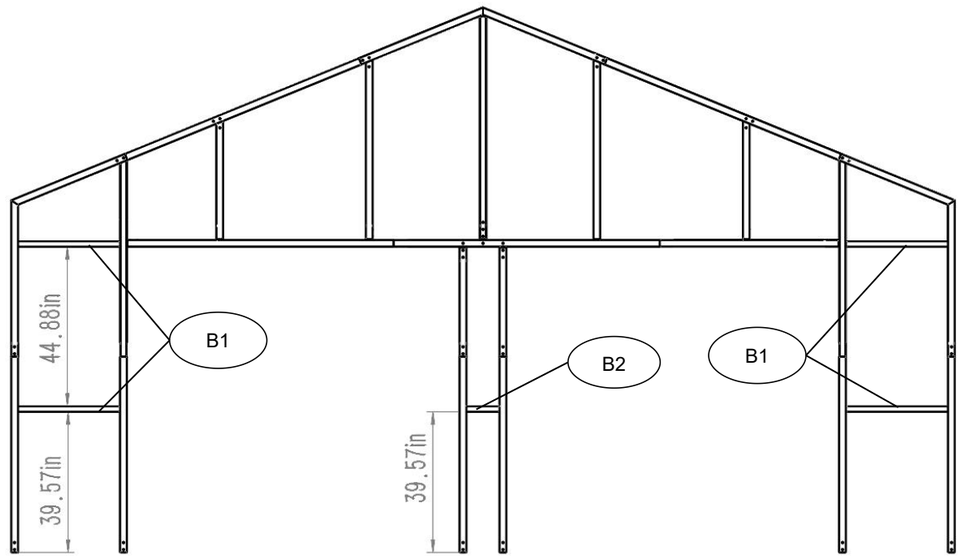

Step 4

Item no.	Reference Image	Qty.	Item no.	Reference Image	Qty.
A11		6	A17		6
A18		6	A19		3
A23		6	A24		3
A25		3	A26		3
L1		42	L4		6
S1		48	S2		87

TRUSS B×3

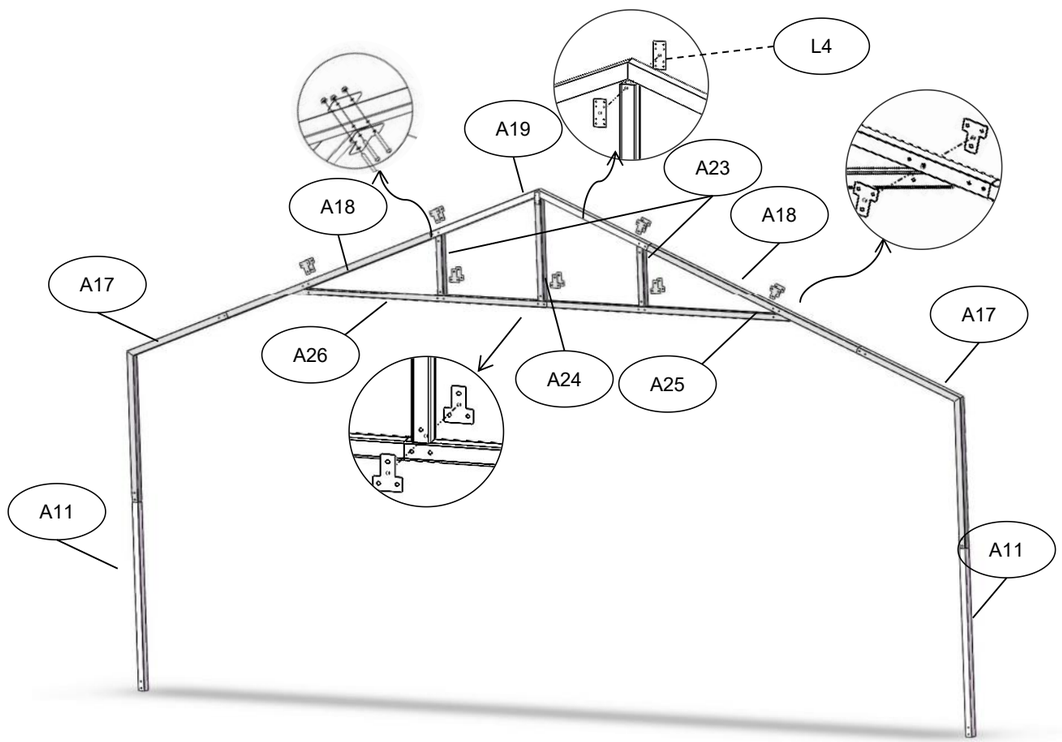

Step 5

Item no.	Reference Image	Qty.	Item no.	Reference Image	Qty.
A11		4	A17		2
A18		2	A19		1
A27		1	A28		2
A29		1	L1		2
L4		1	S1		8
S2		22			

Installation of the rear wall side posts

TRUSS C×1

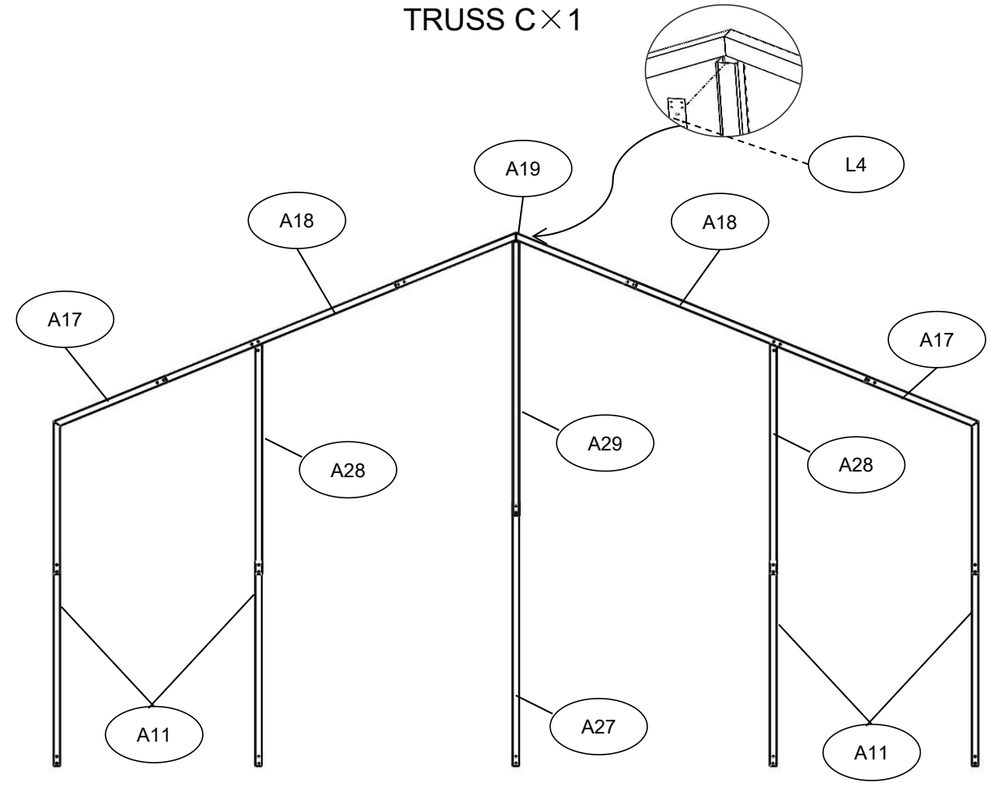

Step 6

Item no.	Reference Image	Qty.		Item no.	Reference Image	Qty.
B3		4		B4		4
L3		16		S1		64

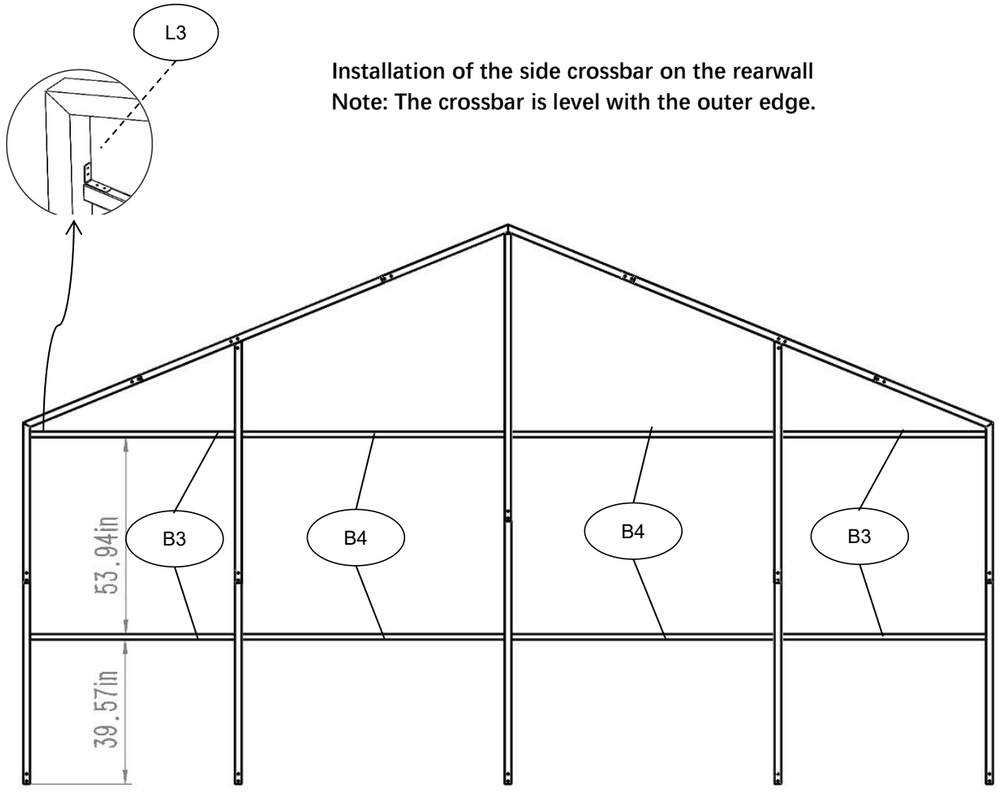

Installation of the side crossbar on the rearwall
Note: The crossbar is level with the outer edge.

Step 7

Item no.	Reference Image	Qty.		Item no.	Reference Image	Qty.
S2		34				

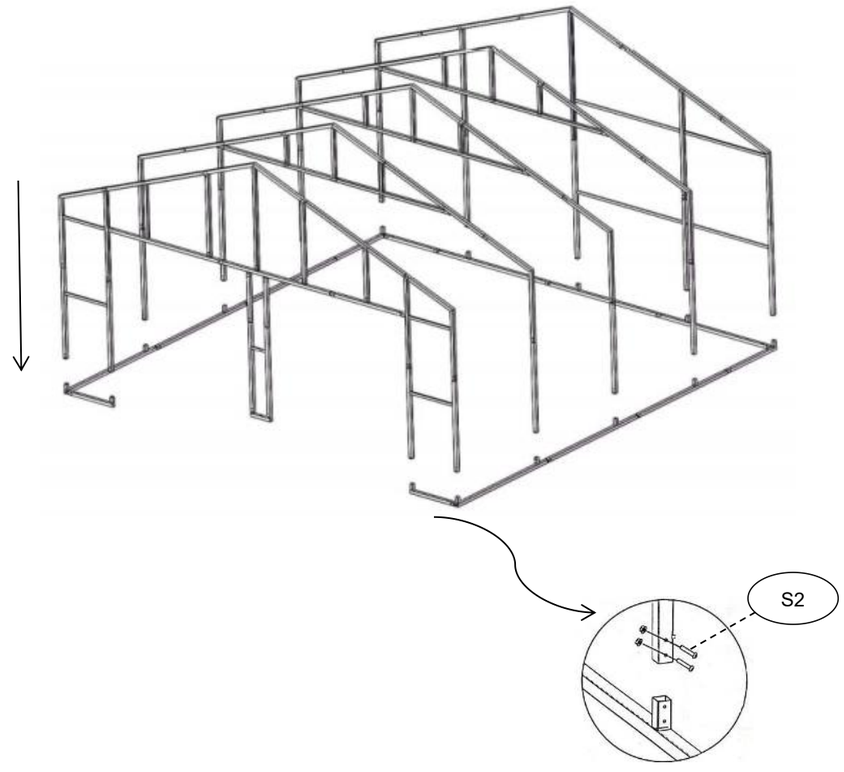

Step 8

Item no.	Reference Image	Qty.		Item no.	Reference Image	Qty.
B5		32		S1		160

Installation of roof support rods
1. Ensure that there is a support rod at the connection point of the two corrugated sheets;
2. A support rod is also required at the eaves position.

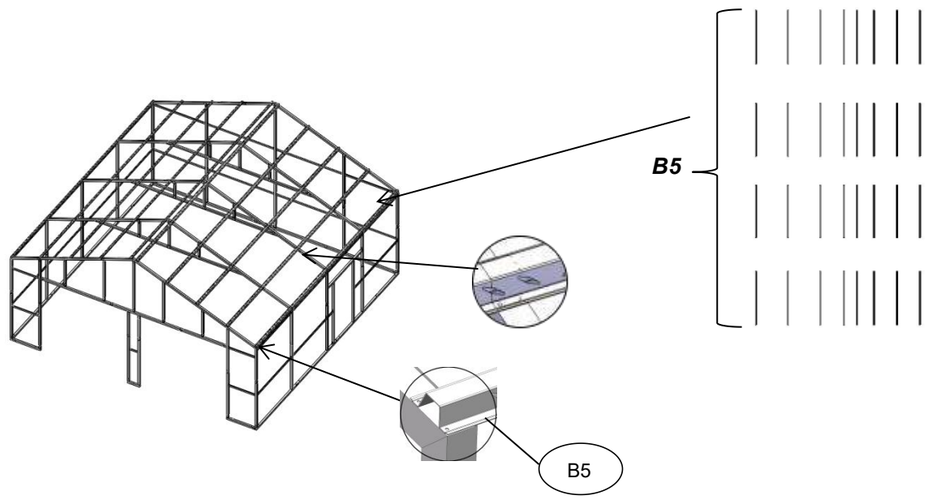

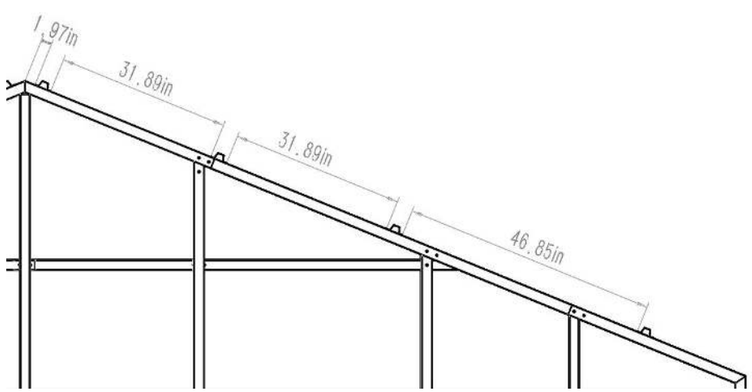

Step 9

Item no.	Reference Image	Qty.		Item no.	Reference Image	Qty.
B7		15		L3		30
S1		120				

Installation of side horizontal bars on the exterior wall
Note: The crossbar is level with the outer edge.

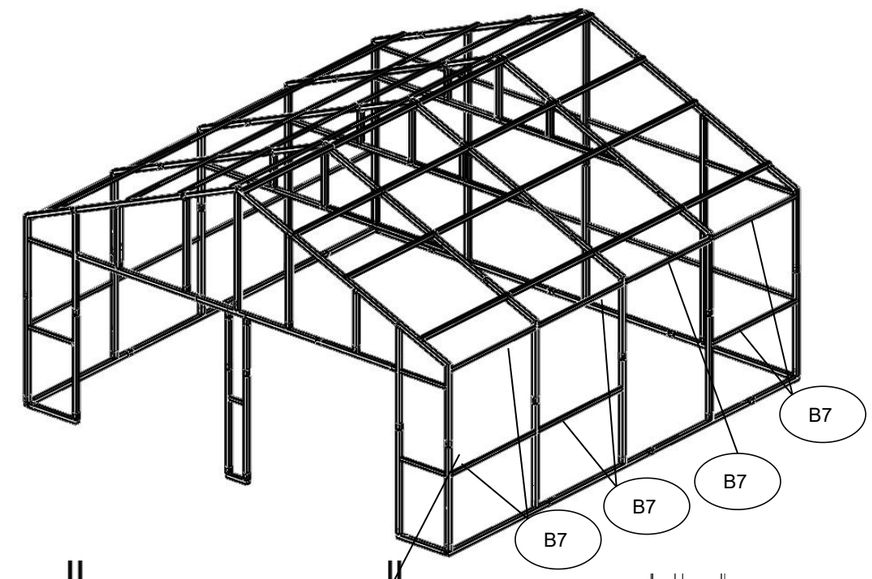

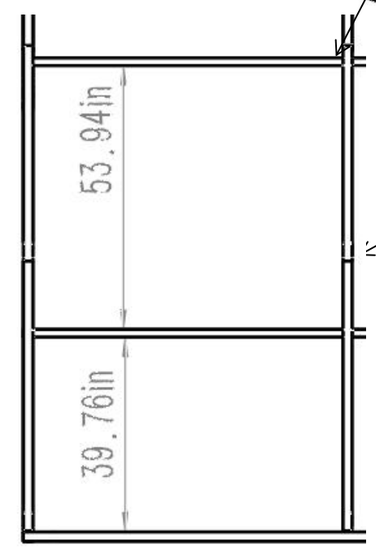

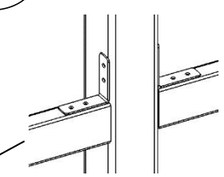

Installation of roof support rods
1. Ensure that there is a support rod at the connection point of the two corrugated sheets;
2. A support rod is also required at the eaves position.

Step 10

Item no.	Reference Image	Qty.	Item no.	Reference Image	Qty.
A30		1	A31		2
B8		1	B9		1
L2		6	L3		4
S1		52			

Installation of the side small door frame

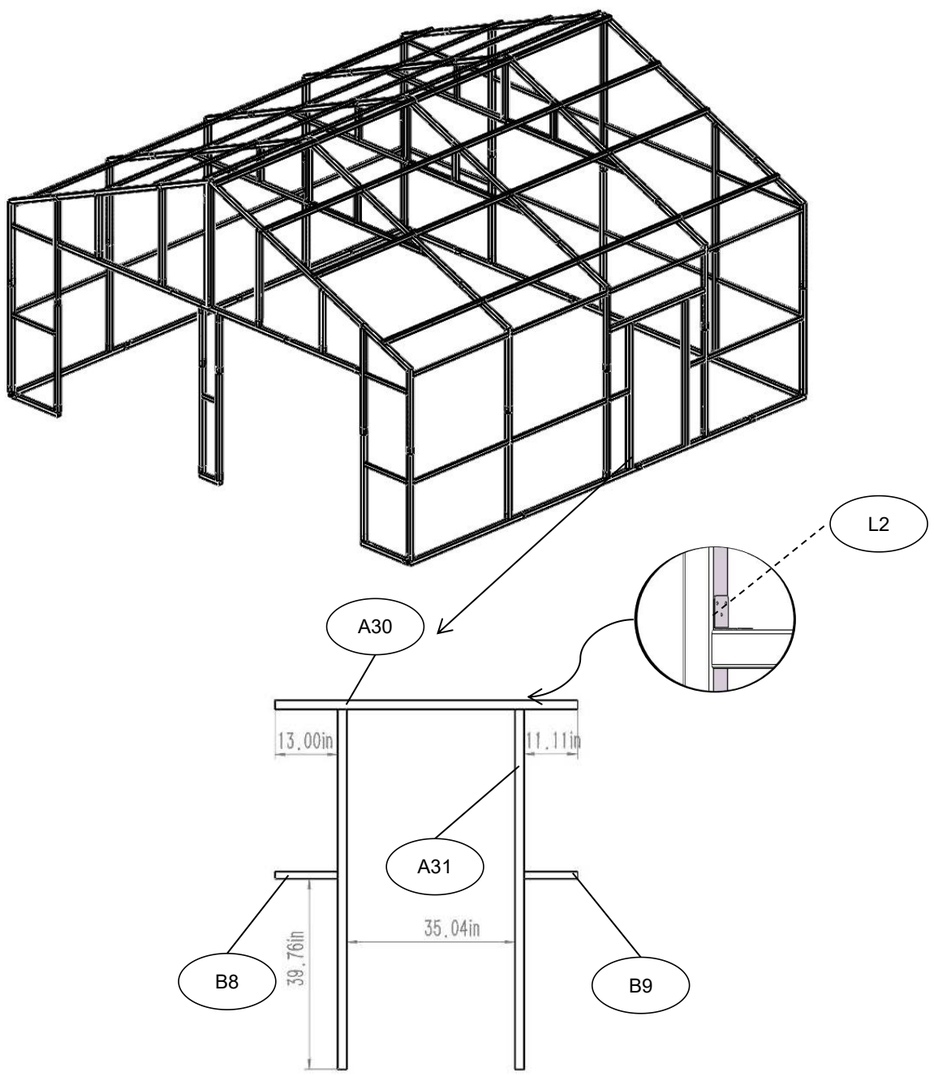

Step 11

Item no.	Reference Image	Qty.	Item no.	Reference Image	Qty.
P1		14	P1-1		2
P1-2		1	S1-1		68

When two panels overlap, make sureupper panel covers the lower panel.
Suggestion: It is recommended to install fixed screws with a spacing of no more than 10″~15″ in the vertical direction.

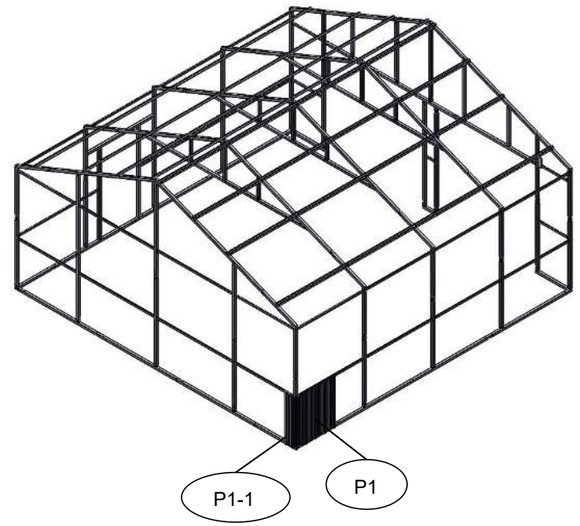

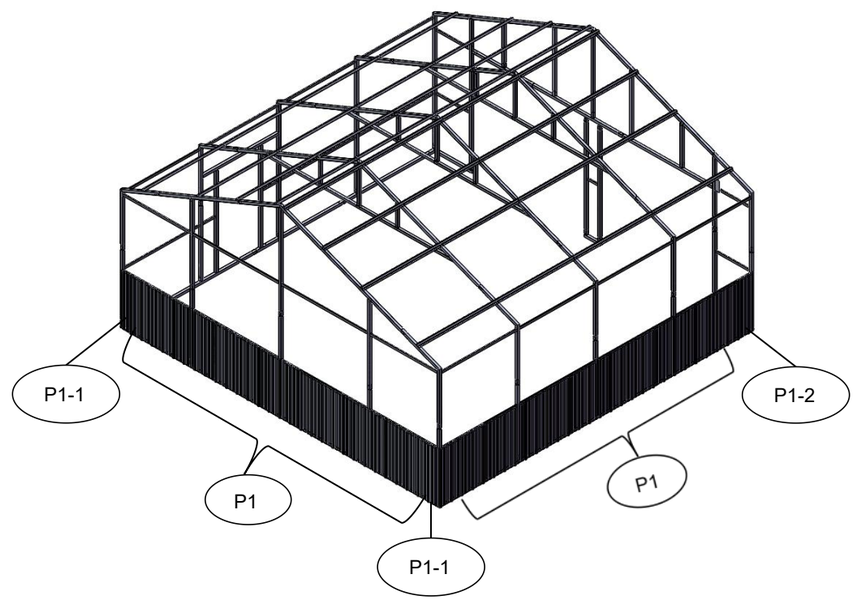

Step 12

Item no.	Reference Image	Qty.		Item no.	Reference Image	Qty.
P2		7		P2-1		1
P3		7		P3-1		2
S1-1		98				

When two panels overlap, make sureupper panel covers the lower panel.
Suggestion: It is recommended to install fixed screws with a spacing of no more than 10″~15″ in the vertical direction.

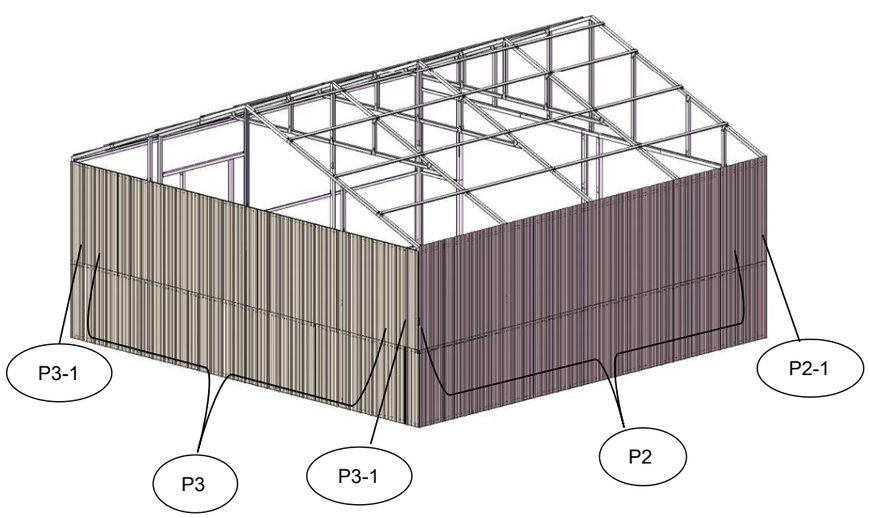

Step 13

Item no.	Reference Image	Qty.		Item no.	Reference Image	Qty.
P4		1		P4-1		1
P5		1		P5-1		1
P6		1		P6-1		1
P7		1		P7-1		1
P8		1		S1-1		90

When two panels overlap, make sureupper panel covers the lower panel.
Suggestion: It is recommended to install fixed screws with a spacing of no more than 10″~15″ in the vertical direction.

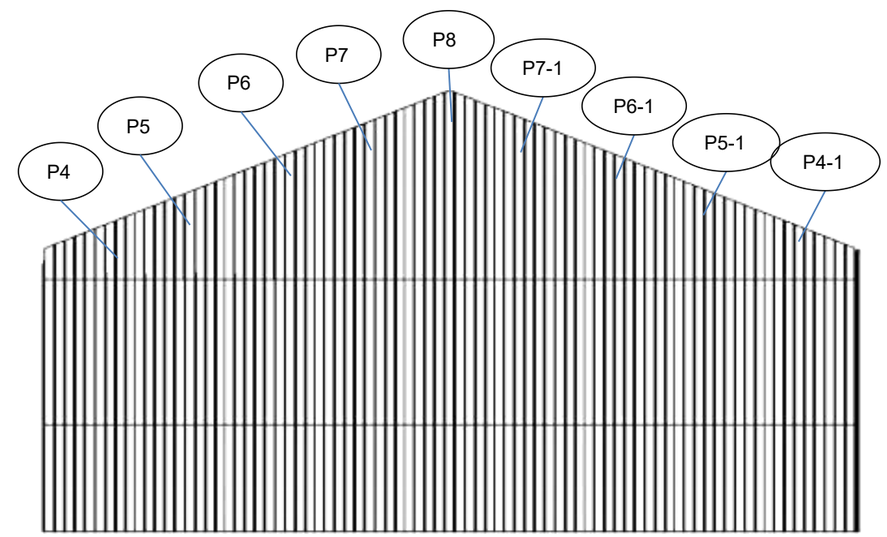

Step 14

Item no.	Reference Image	Qty.		Item no.	Reference Image	Qty.
P1		9		P1-3		3
S1-1		44				

When two panels overlap, make sureupper panel covers the lower panel.
Suggestion: It is recommended to install fixed screws with a spacing of no more than 10″~15″ in the vertical direction.

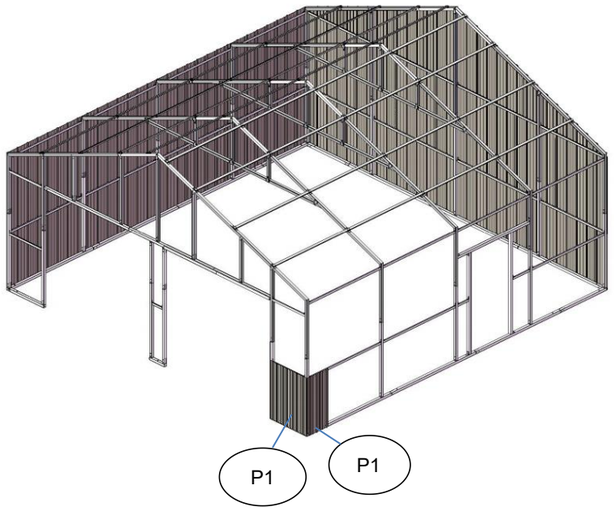

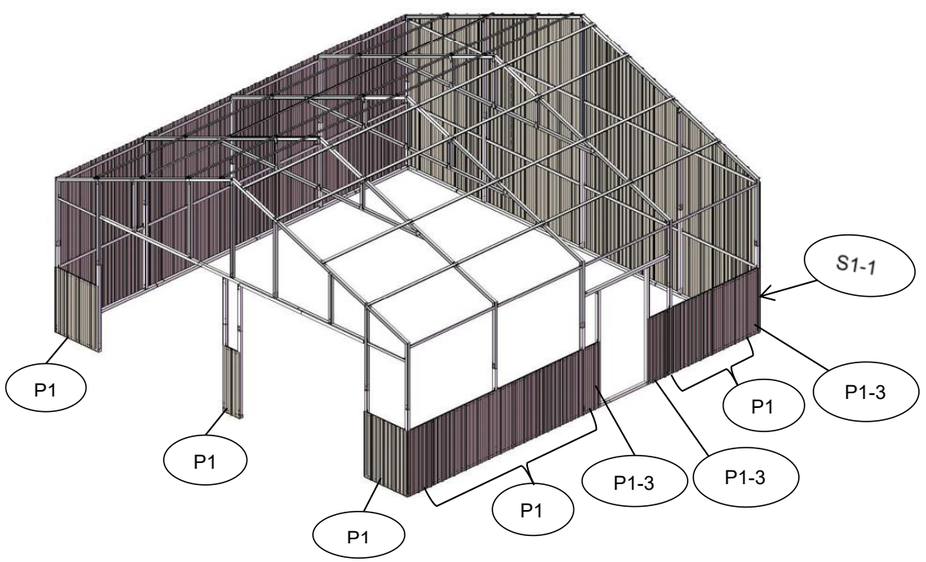

Step 15

Item no.	Reference Image	Qty.		Item no.	Reference Image	Qty.
P1-3		2		P2		9
P2-2		2		P2-3		1
Z1-2		8		Z2		6
Z2-1		2		S1-1		140

When two panels overlap, make sureupper panel covers the lower panel.
Suggestion: It is recommended to install fixed screws with a spacing of no more than 10″~15″ in the vertical direction.

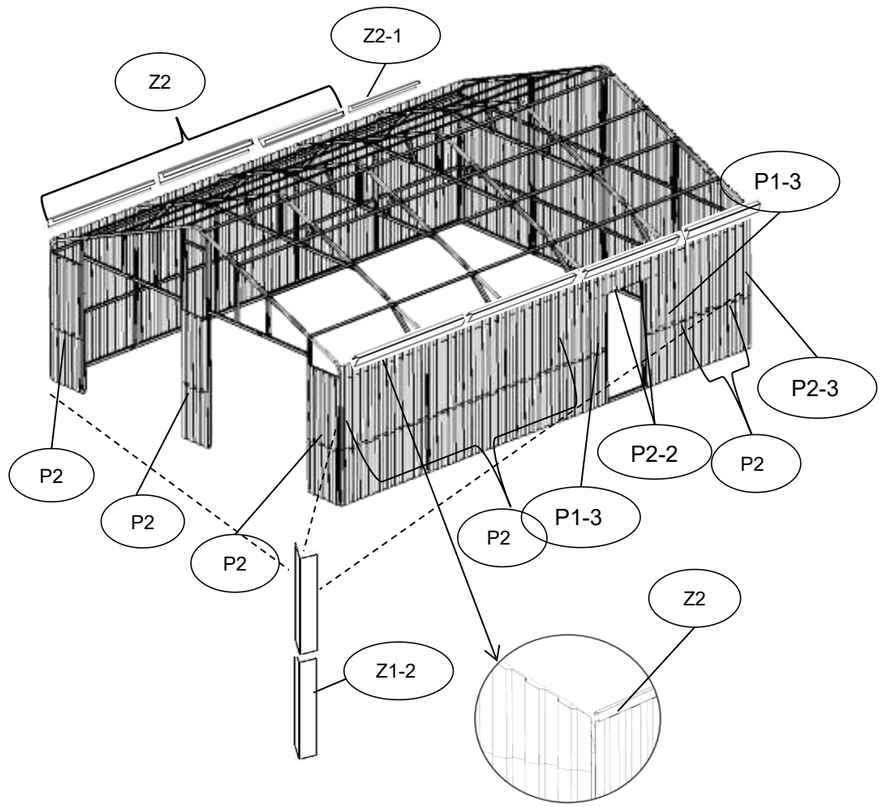

Step 16

Item no.	Reference Image	Qty.	Item no.	Reference Image	Qty.
P9		1	P9-1		1
P10		1	P10-1		1
P11		1	P11-1		1
P12		1	P12-1		1
P13		1	S1-1		100

When two panels overlap, make sureupper panel covers the lower panel.
Suggestion: It is recommended to install fixed screws with a spacing of no more than 10″~15″ in the vertical direction.

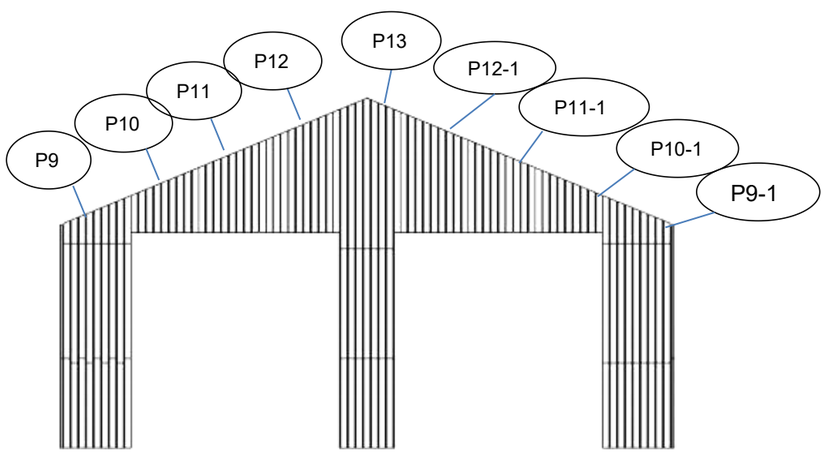

Step 17

Item no.	Reference Image	Qty.	Item no.	Reference Image	Qty.
P14		28	P14-1		4
S1-1		192	S5		2

When two panels overlap, make sureupper panel covers the lower panel.
Suggestion: It is recommended to install fixed screws with a spacing of no more than 10″~15″ in the vertical direction.

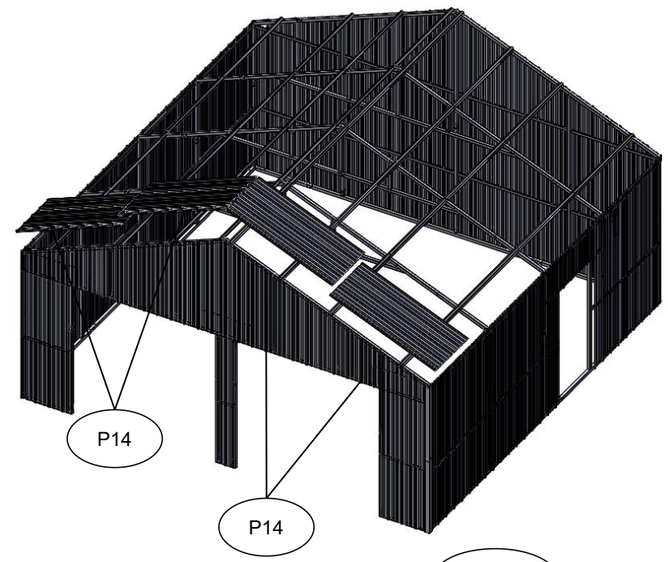

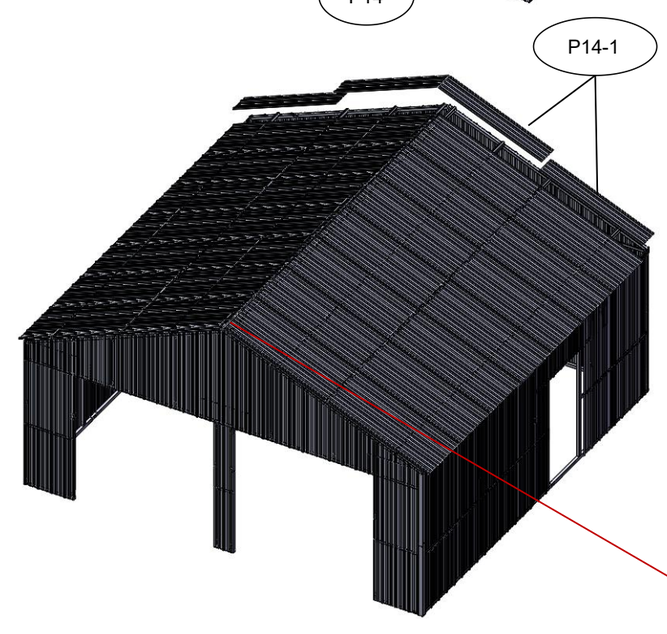

After the installation of the metal panels at the highest point of the roof is completed, use theprovided tape to stick them together along the gaps between the metal panels for windproof andsealing purposes. (After pasting, the roof is also equipped with protective metal decorative panels,see the installation steps later)

Step 18

Item no.	Reference Image	Qty.	Item no.	Reference Image	Qty.
Z1		6	Z1-1		2
Z3		3	Z3-1		1
S1-1		64			

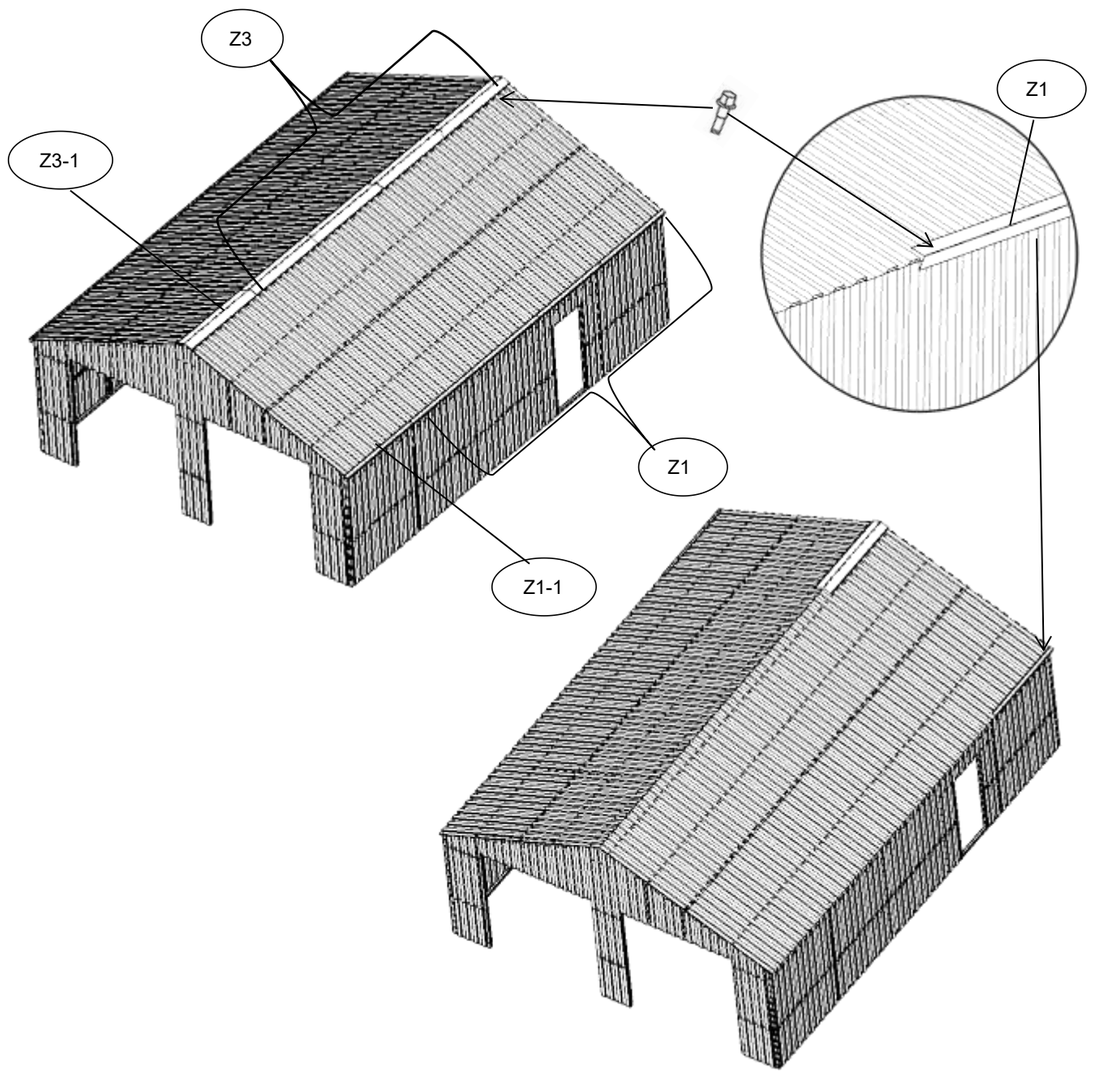

Step 19

Item no.	Reference Image	Qty.	Item no.	Reference Image	Qty.
Z1		8	Z4		2
Z5		12	S1-1		112

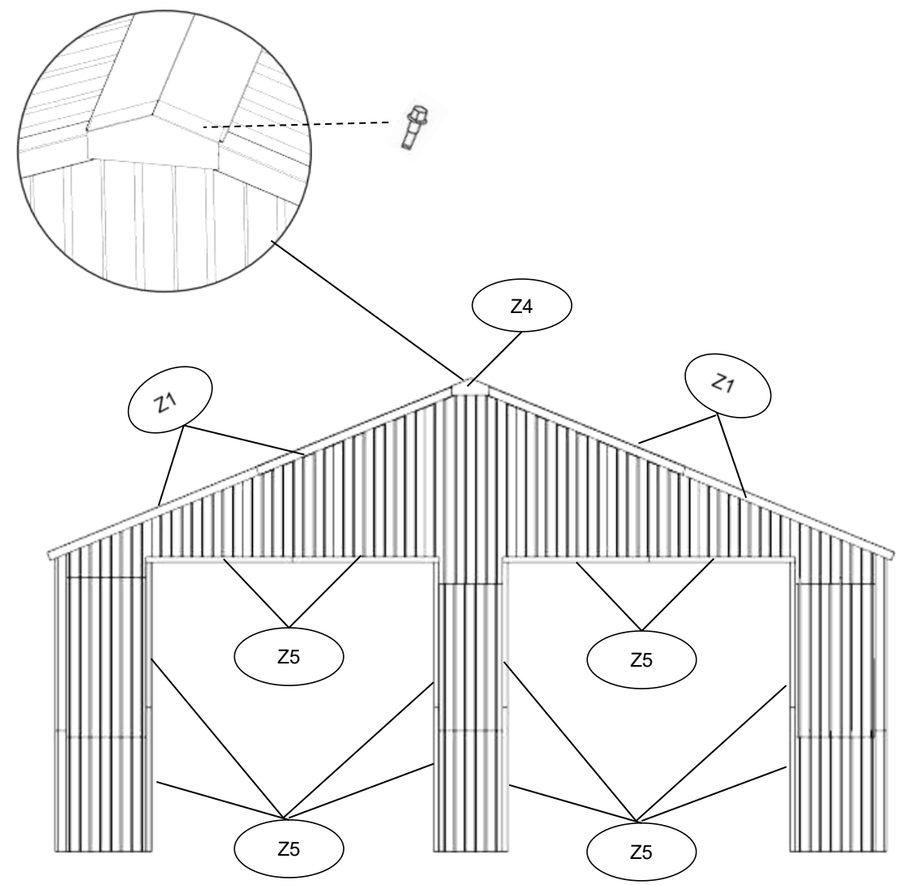

Step 20

Item no.	Reference Image	Qty.	Item no.	Reference Image	Qty.
Z5-1		2	Z5-2		1
S1-1		22			

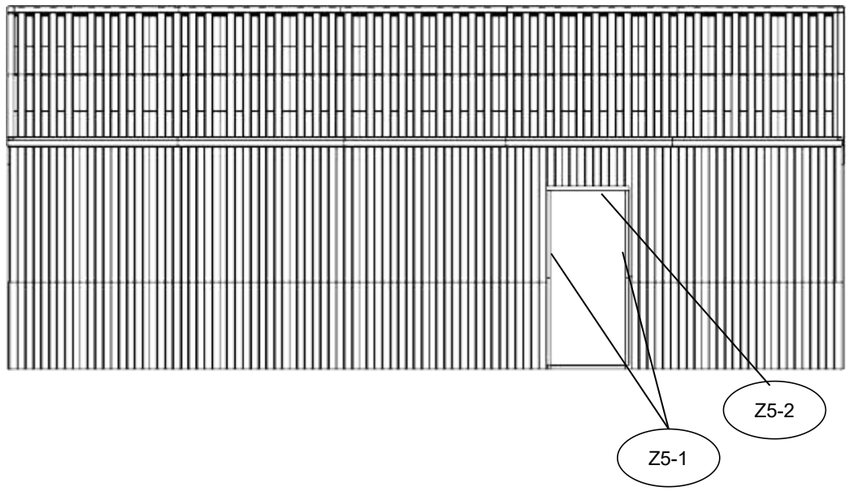

Step 21

Item no.	Reference Image	Qty.	Item no.	Reference Image	Qty.
B10		2	B11		2
B12		2	B13		2
L3		5	L6		2
L7		1	S1		35

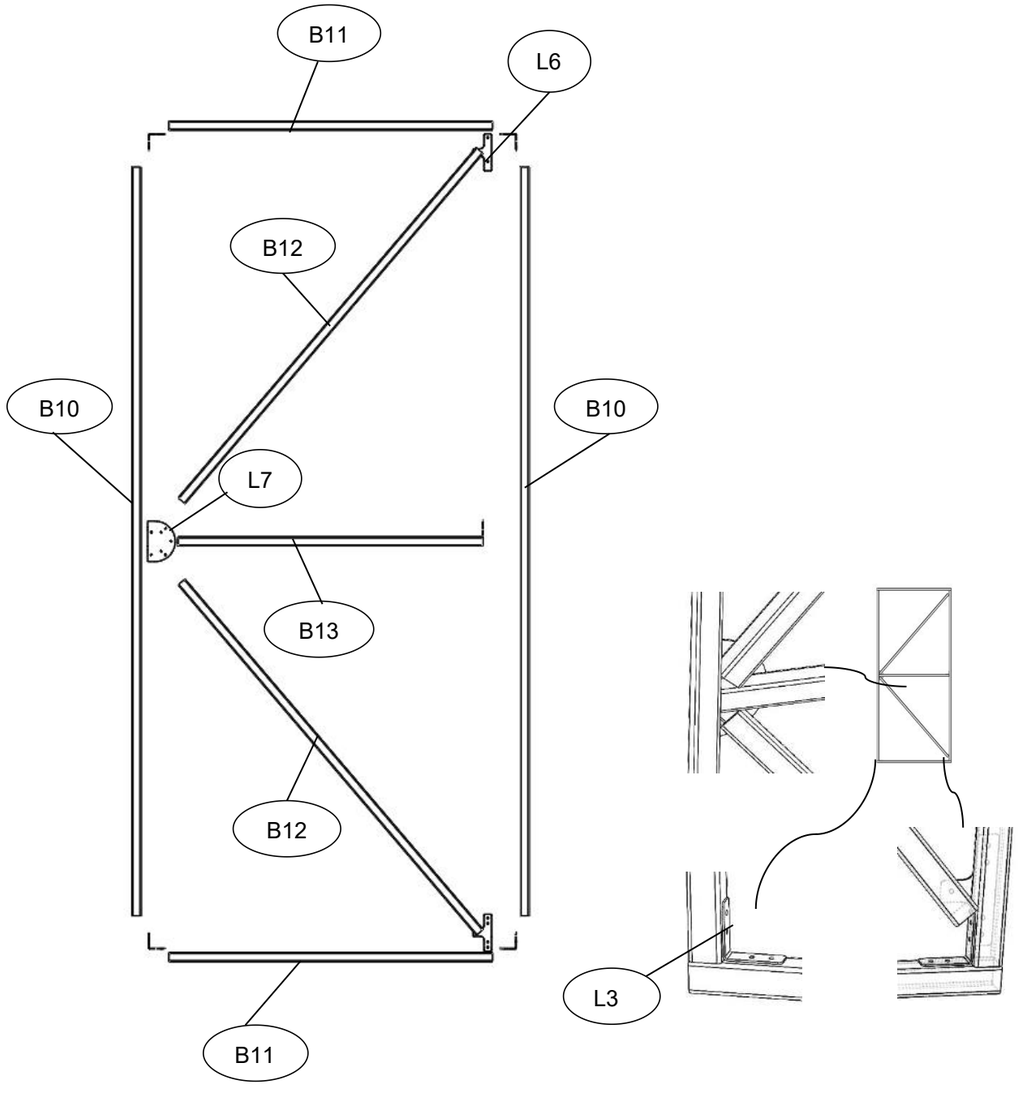

Step 22

Item no.	Reference Image	Qty.		Item no.	Reference Image	Qty.
P15		2		Z6		2
Z6-1		2		S1-1		20

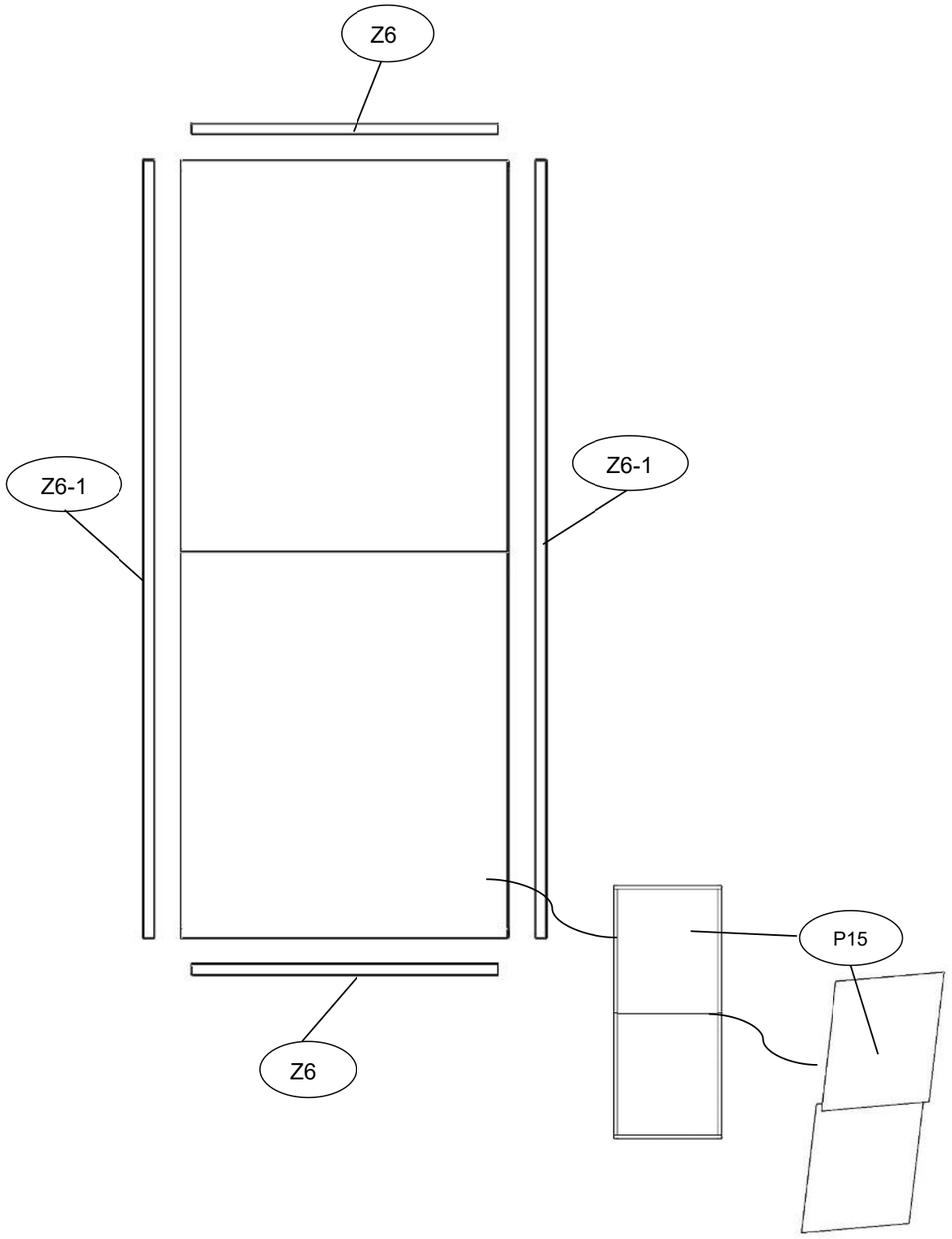

Step 23
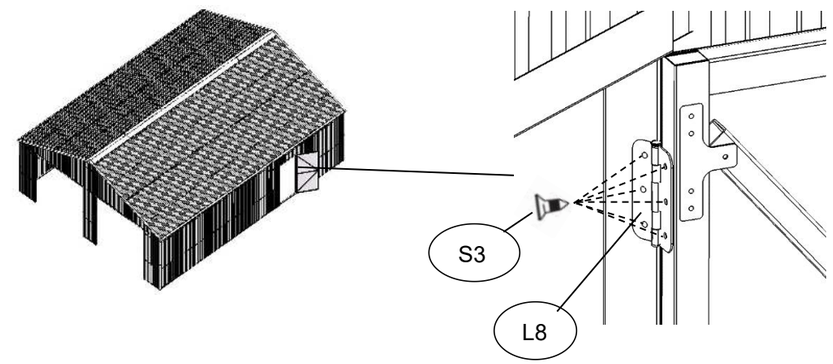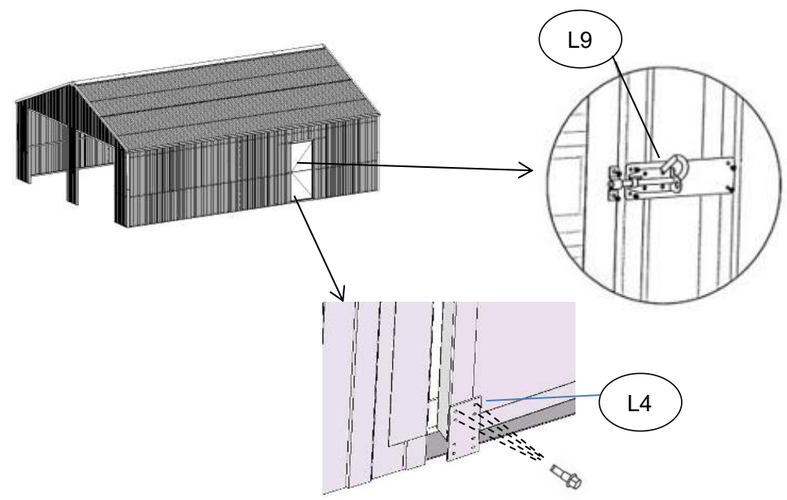
Item no.	Reference Image	Qty.		Item no.	Reference Image	Qty.
L4		1		L8		2
L9		1		S1		10
S4		12